CASE
CONSTRUCTION

580SN

CONSTRUCTION KING BACKHOE LOADER

TIER 4 FINAL CERTIFIED

Model	FPT F5BFL413B
Emissions Certification	Tier 4 Final
Type	Diesel 4-stroke, Turbocharged
Cylinders	4
Bore/Stroke	3.90 x 4.33 in (99 x 110 mm)
Displacement	207 in³ (3.4 L)
Fuel injection	Direct, high pressure common rail – HPCR
Fuel	Diesel
Engine speeds*	RPM
Rated speed – full load	2200
Low idle	900 – 1000
High idle – no load	2330 – 2430
Horsepower @ 2200 RPM:	
Gross	97 hp (72 kW)
Net	95 hp (71 kW)
Maximum torque @ 1400 RPM:	
Gross	334 lb·ft (453 N·m)
Net	333 lb·ft (452 N·m)
Torque rise at rated speed	45% +/- 5%
Radiator:	
Core type	Square wave
Core size area	486 in² (3 145 cm²)
Rows of tubes	4
39° fan:	
Style	9 blade suction
Diameter	19.65 in (499 mm)
Ratio**	1.4:1
Pump operating angle ratings:	
Side to side	Rated 35°
Fore and aft	Rated 35°
Oil filtration	Replaceable, full flow cartridge

NOTE: *Engine speeds w/ standard transmission. Meets federal emission regulations. **Viscous fan.

Transmission – standard:
4F-4R Power Shuttle Synchromesh Transmission manual gear shift, fully synchronized

Gear ratios - Power Shuttle	Forward/Reverse
1st	5.603/4.643
2nd	3.481/2.884
3rd	1.584/1.313
4th	0.793/0.657

Travel speeds – Standard Power Shuttle

Transmission	Forward mph (kph)	Reverse mph (kph)
1st	3.8 (6.1)	4.5 (7.3)
2nd	6.0 (9.7)	7.2 (11.6)
3rd	13.1 (21.1)	15.7 (25.3)
4th	24.6 (39.6)	29.5 (47.5)

Transmission – optional:
PowerDrive H-Type, 4F-4R hydraulic clutch shifting w/ auto shift mode and direct drive

Gear Ratios - H Type	Forward/Reverse
1st	5.533/4.549
2nd	3.359/2.762
3rd	1.533/1.260
4th	0.811/0.667

Travel speeds – Optional H-Type PowerDrive

DD Transmission	Forward mph (kph)	Reverse mph (kph)
1st	3.9 (6.2)	4.6 (7.4)
2nd	6.3 (10.1)	7.5 (12.1)
3rd w/ DD Feature Off	13.6 (21.9)	16.4 (26.3)
3rd w/ DD	14.2 (22.8)	17.0 (27.4)
4th w/ DD Feature Off	24.2 (39.0)	29.0 (46.7)
4th w/ DD	25.0 (40.2)	29.8 (48.0)

Torque converter ratio	2.2

Differential-lock:
On-the-go push-button activation

Front/Rear axle (w/ 4WD 12x16.5 front tires):

Differential ratio	2.0/2.5
Planetary hub ratio	6.0/6.4
Total reduction ratio	12.0/16.0

Service brakes:
Individually applied, power assisted, hydraulically actuated, maintenance-free, self-adjusting, outboard mounted, wet disc, 2 per side.

Total disc area	384 in² (0.25 m²)

Parking brakes	Trans Mounted

spring-applied hydraulic release – SAHR

NOTE: Travel speeds at 2312 engine RPM specified: w/ 19.5 L x 24.0 tires.

Voltage	12 Volts, negative ground
Alternator	160 amp
Dual batteries:	850 cold-cranking amps each
Power plugs – 2	30 amps total

ROPS/FOPS certified protective canopy; Anti-vandalism cover for dash – w/ canopy only; Rear fenders extensions; Coat hook w/ garment strap; Interior rearview convex mirror; Mechanical suspension seat – 180° swivel – Vinyl; 3 in (76 mm) retractable seat belt; Cup holder/ storage tray mounted on left-hand fender; Right-hand storage compartment w/ lid, tilt-steering wheel on cab models.

Gauges:
Engine water temperature; Converter oil temperature; Fuel level; Tachometer/ hourmeter; DEF level.

Warning lights:
Air cleaner restriction; Alternator; A/C high pressure; Cold start; Engine oil pressure; Hydraulic oil filter bypass; Parking brake engagement; Low fuel; Water in fuel; Low DEF.

Audible alarms w/ diagnostics:
Coolant temperature; Engine oil pressure; Parking brake engagement; Converter oil temperature; Shuttle engagement/seat position; Backup alarm; Low DEF.

Horn	Dual switched front and rear

Configuration 1 – SAE Transport:
No Operator, Loader Bucket, Cab, AC, 1,100 lb front counter weight, 2WD, Full of Fuel, SAE Carry T4 Final Engine, Pilot Controls, 11 L – 16 @ 52 psi front tires, 19.5 L – 24 Rear Tires.
17,810 lb (8 078 kg)

Configuration 2 – SAE Transport:
No Operator, 4:1 Loader Bucket, E-hoe, Cab, 1,100 lb front counter weight, Full of Fuel, SAE Carry T4 Final Engine, Pilot Controls, 12 x 16.5 @ 50 psi front tires, 4WD w/ driveshaft guard, 19.5 L – 24 @ 30 psi rear tires.
19,750 lb (8 958 kg)

Add-on weights:

Cab-over canopy	309 lb (140 kg)
Fabricated stabilizer pads	141 lb (64 kg)
Extendahoe®	286 lb (130 kg)

Pump:
Bosch Rexroth Series 31 Variable Displacement Axial Piston Pump

Main relief pressure:	
Standard	3,450 +/- 50 psi (238 +/- 3.5 bar)
Power Lift	3,625 +/- 50 psi (250 +/- 3.5 bar)

Filtration:
7-micron, full flow replaceable cartridge on return line, condition indicator light for filter.

Oil cooler	Heavy-duty

Loader flow @ rated engine RPM:
41 gpm @ 2,340 psi (156.2 L/min @ 161 bar)

Loader control valve w/ pilot or manual backhoe controls:
Two or three-spool closed center sectional control valve. Single lever manual control for lift and tilt functions. The three-spool valve uses a proportional Electro-Hydraulic control for the auxiliary function. The lift lever has a positive hold "Float" position and a "return-to-dig" feature.

Loader auxiliary hydraulics w/ proportional thumb switch w/ detent on loader control handle:
0 – 41 gpm @ 2,340 psi (0 – 156.2 L/min @ 161 bar)

Backhoe flow @ rated engine RPM:
41 gpm @ 3,100 psi (156.2 L/min @ 214 bar)

Manual backhoe control valve:
Six-spool monoblock open center control valve w/ seventh and eighth spool bolt-on sections. Features "Pro-Control" which includes custom designed spools for each individual function along w/ "swing cushioning" valve for zero-wag swing control. Basic control valve has an open center parallel circuit for all functions.

Pilot backhoe control valve:
Six, seven, or eight spool sectional closed center control valve. Features "Pro-Control" which includes custom designed spools for each individual function along w/ "swing cushioning" valve for zero-wag swing control. Basic control valve is closed center, w/ circuits in parallel w/ a post-compensated, flow sharing feature for simultaneous operation of all circuits.

1-way flow auxiliary hydraulics:
1-way flow hydraulic valve is equipped w/ an adjustable LS relief valve to control attachment pressure and a 6 position flow control selector for 6 detented, distinct flow settings.
Actuation:
Manual backhoe controls – cab floor pedal
Pilot controls – left-hand joystick

2-way flow auxiliary hydraulics*:
Actuation:
Activate the 2-way flow switch located on the rear console
Manual shift – 2-way flow linkage on far right of backhoe tower
Pilot controls – left-hand joystick.

NOTE: *Available w/ 1-way/2-way Aux. Hyd. option.

Fuel tank	35.0 gal (132.0 L)
DEF tank	3.6 gal (13.5 L)
Hydraulic system:	
Total	125 qt (118.0 L)
w/ Extendahoe®	131 qt (123.6 L)
Reservoir w/ filter	53 qt (50.5 L)
Reservoir w/o filter	55 qt (52.4 L)
Transmission – total system:	
2WD Standard	18 qt (17.0 L)
4WD Standard	21 qt (19.4 L)
4WD PowerDrive H-Type	19 qt (18.0 L)

Standard front axle:	
4WD Differential	8.1 qt (7.7 L)
4WD Planetaries – each	0.5 qt (0.5 L)
Rear axle:	
Differential and planetaries	14.4 qt (13.6 L)
Engine oil w/ filter	8.5 qt (8.0 L)
Cooling system:	
w/ heater	19.0 qt (18.0 L)
w/o heater	18.3 qt (17.3 L)
Window washer reservoir	3.0 qt (2.8 L)

Front tires:	
2WD	11.0 L x 16.0, 10-ply rating
4WD	12.0 L x 16.5, 10-ply rating
4WD	12.5/80 x 18.0 10-ply rating
Rear tires:	
2/4WD	19.5 L x 24.0, 10-ply rating
2/4WD	500/70 R24, 10-ply rating
Turning radius: Curb to Curb:	
2WD:	
Brakes on	10 ft 8 in (3.24 m)
Brakes off	12 ft 4 in (3.76 m)
4WD – engaged*:	
Brakes on	11 ft 4 in (3.45 m)
Brakes off	13 ft 10 in (4.21 m)
4WD – disengaged*:	
Brakes on	11 ft 0 in (3.36 m)
Brakes off	12 ft 3 in (3.72 m)

NOTE: *Turning radius dimensions curb to curb w/ 12.0 x 16.5 front tires and 19.5 L x 24.0 rear tires.

Type	Width	Weight	Struck	Heaped Capacity
Long Lip Bucket:				
without bolt-on edge	82 in (2.08 m)	864 lb (392 kg)	0.88 yd³ (0.67 m³)	1.0 yd³ (0.79 m³)
with bolt-on edge	93 in (2.36 m)	1,188 lb* (539 kg)	1.10 yd³ (0.89 m³)	1.3 yd³ (0.99 m³)
4 IN 1® Bucket with bolt-on edge	82 in (2.08 m)	1,572 lb* (713 kg)	0.85 yd³ (0.65 m³)	1.0 yd³ (0.80 m³)

NOTE: *Weight of 4 IN 1® bucket includes edges, cylinders and tube lines.

Type	Width	Weight	Heaped Capacity
Universal Buckets	12 in (305 mm)	295 lb (134 kg)	3.40 ft³ (0.10 m³)
	18 in (457 mm)	356 lb (162 kg)	5.30 ft³ (0.15 m³)
	24 in (610 mm)	427 lb (194 kg)	7.70 ft³ (0.22 m³)
	30 in (762 mm)	489 lb (222 kg)	10.20 ft³ (0.29 m³)
	36 in (914 mm)	552 lb (251 kg)	12.70 ft³ (0.36 m³)
High Capacity Buckets	24 in (610 mm)	447 lb (203 kg)	8.50 ft³ (0.24 m³)
	30 in (762 mm)	502 lb (228 kg)	10.60 ft³ (0.30 m³)

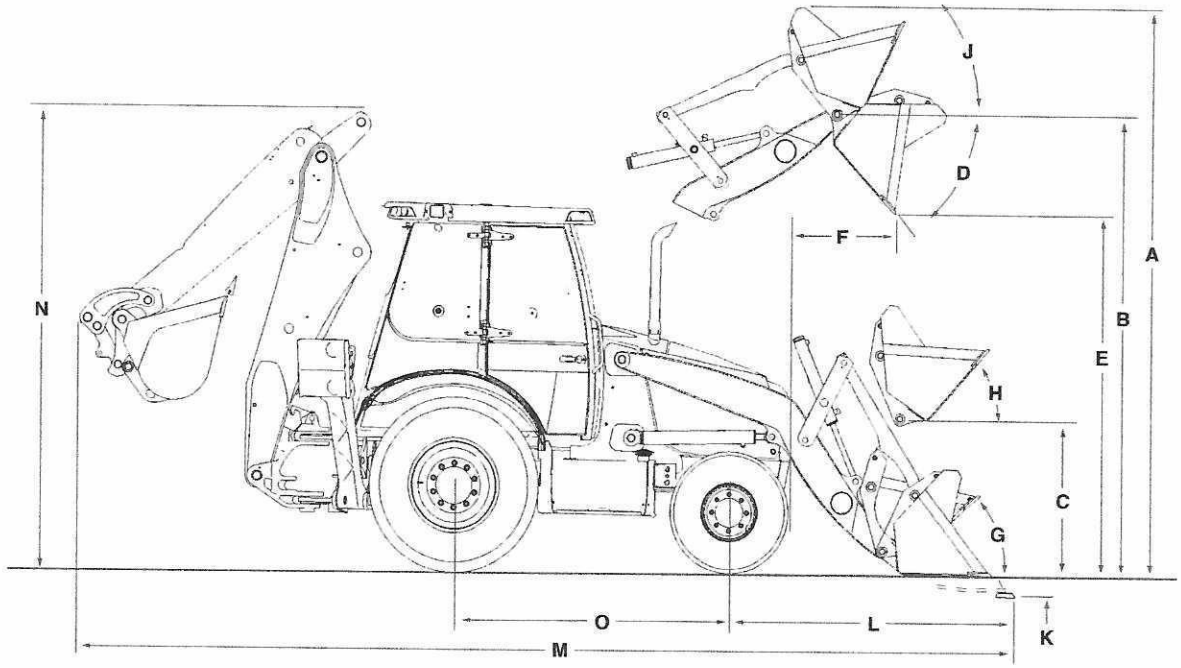

Line drawings are for illustrative purpose only and may not be exact representation of unit.

	Long Lip Bucket	4 IN 1® Bucket
A. Overall operating height – fully raised	13 ft 9 in (4.18 m)	13 ft 8 in (4.16 m)
Height to:		
B. Bucket hinge pin fully raised	11 ft 3 in (3.42 m)	11 ft 3 in (3.42 m)
C. Bucket hinge pin at SAE carry	13.6 in (345 mm)	13.6 in (345 mm)
D. Dump angle at full height	47°	47°
E. Dump clearance at full height, 45° dump:		
Bucket	8 ft 10 in (2.69 m)	8 ft 11 in (2.71 m)
Clam open	—	9 ft 8 in (2.96 m)
F. Dump reach at full height, 45° dump – from bumper:		
Bucket	31.5 in (801 mm)	29.1 in (738 mm)
Clam open	—	15.3 in (388 mm)
Bucket rollback:		
G. @ Groundline	42°	42°
H. @ SAE carry	42°	42°
J. @ Full height	Adjustable	Adjustable
K. Digging depth below grade:		
Bucket flat	6.1 in (155 mm)	4.8 in (122 mm)
Clam open – dozing	—	4.1 in (103 mm)
L. Reach from front axle centerline – bucket on ground	6 ft 10 in (2.07 m)	6 ft 8 in (2.03 m)
Lift capacity to full height – calculated values	7,044 lb (3 195 kg)	6,703 lb (3 040 kg)
Breakout force:		
Lift cylinders	9,833 lb (4 460 daN)	9,610 lb (4 359 daN)
Dump cylinders	10,947 lb (4 965 daN)	11,658 lb (5 288 daN)
Bucket cutting edge width	82.5 in (2.09 m)	82.0 in (2.08 m)
Maximum grading angle	114°	114°
Maximum clam opening	—	38.3 in (972 mm)
Moldboard height	—	36.8 in (934 mm)
Raising time to full height – manual/pilot controls	2.6/3.2 sec	2.6/3.2 sec
Bucket dumping time	0.8/1.2 sec	0.8/1.2 sec
Lowering time:		
Power down	1.9/2.1 sec	1.9/2.1 sec
Return-to-dig	2.5/2.2 sec	2.5/2.2 sec
Clam:		
Open time	—	1.1 sec
Close time	—	1.1 sec

NOTE: Loader dimensions taken with 4WD, 12.0 x 16.5 front tires and 19.5 L x 24.0 rear tires.

	2WD with 17.5 L x 24.0 rear tires	4WD with 19.5 L x 24.0 tires
M. Overall transport length:		
Long Lip bucket with Quick Coupler	23 ft 5 in (7.14 m)	23 ft 4 in (7.10 m)
4 IN 1® bucket with Quick Coupler	23 ft 3 in (7.07 m)	23 ft 1 in (7.04 m)
Long Lip bucket with Straight Links	23 ft 6 in (7.15 m)	23 ft 4 in (7.12 m)
4 IN 1® bucket with Straight Links	23 ft 3 in (7.09 m)	23 ft 2 in (7.06 m)
Overall transport width	7 ft 2 in (2.17 m)	7 ft 2 in (2.17 m)
Height:		
To top of canopy	8 ft 8 in (2.64 m)	8 ft 9 in (2.66 m)
To top of cab	8 ft 9 in (2.68 m)	8 ft 11 in (2.72 m)
To top of exhaust stack	8 ft 5 in (2.58 m)	8 ft 7 in (2.62 m)
N. Transport	10 ft 10 in (3.29 m)	11 ft 1 in (3.37 m)
Ground clearance at backhoe frame	12 in (304 mm)	15.0 in (381 mm)
Angle of departure	15.3°	19.0°
Front wheel tread:		
11.0 L x 16.0	67.5 in (1.72 m)	67.5 in (1.72 m)
12.0 L x 16.5	67.7 in (1.72 m)	67.7 in (1.72 m)
12.5/80 x 18.0	70.3 in (1.79 m)	70.3 in (1.79 m)
19.5 L x 24.0	61.2 in (1.55 m)	61.2 in (1.55 m)
17.5 L x 24.0	63.1 in (1.60 m)	63.1 in (1.60 m)
Width over tires:		
11.0 L x 16.0	79.3 in (2.02 m)	79.3 in (2.02 m)
12.0 L x 16.5	81.1 in (2.06 m)	81.1 in (2.06 m)
12.5/80 x 18.0	82.9 in (2.10 m)	82.9 in (2.10 m)
19.5 L x 24.0	81.4 in (2.07 m)	81.4 in (2.07 m)
17.5 L x 24.0	81.7 in (2.07 m)	81.7 in (2.07 m)
O. Wheelbase:		
19.5 L x 24.0	84.0 in (2.13 m)	84.5 in (2.15 m)
17.5 L x 24.0	84.0 in (2.13 m)	84.5 in (2.15 m)

	Bore Diameter	Rod Diameter	Stroke	Closed Length
Loader:				
Lift – 2	3.25 in (82.6 mm)	1.75 in (44.5 mm)	28.86 in (733.0 mm)	42.95 in (1 062.0 mm)
Dump – 2	3.00 in (76.2 mm)	1.50 in (38.1 mm)	20.33 in (516.5 mm)	29.90 in (759.5 mm)
4 IN 1® clam – 2	3.00 in (76.2 mm)	1.75 in (44.5 mm)	9.08 in (230.6 mm)	19.62 in (498.3 mm)
Backhoe:				
Boom	5.00 in (127.0 mm)	2.50 in (63.5 mm)	38.25 in (971.6 mm)	52.82 in (1 341.6 mm)
Dipperstick	4.75 in (120.7 mm)	2.50 in (63.5 mm)	25.14 in (628.5 mm)	39.65 in (1 007.0 mm)
Bucket	3.50 in (88.9 mm)	2.50 in (63.5 mm)	35.35 in (897.9 mm)	48.17 in (1 223.6 mm)
Extendahoe®	3.00 in (76.2 mm)	1.75 in (44.5 mm)	42.05 in (1 068.0 mm)	56.22 in (1 428.0 mm)
Swing – 2	4.00 in (101.6 mm)	2.00 in (50.8 mm)	11.50 in (292.0 mm)	24.44 in (620.8 mm)
Stabilizer – 2	4.50 in (114.3 mm)	2.25 in (57.2 mm)	21.37 in (542.9 mm)	33.87 in (860.2 mm)

	Front – 2WD	Rear	Front – 4WD
Maximum static	70,821 lb (32 124 kg)	90,145 lb (40 889 kg)	64,613 lb (29 308 kg)
Dynamic operating	44,261 lb (20 076 kg)	56,200 lb (25 492 kg)	39,328 lb (17 839 kg)
Static operating	17,704 lb (8 030 kg)	22,480 lb (10 197 kg)	15,732 lb (7 136 kg)
Oscillation – front axle	22° total – 11° side to side	—	22° total – 11° side to side

	Standard Backhoe		Extendahoe®			
			Retracted		Extended	
	Standard	Power Lift	Standard	Power Lift	Standard	Power Lift
Boom Lift	Lift Capacity lb (kg)	Lift Capacity lb (kg)	Lift Capacity lb (kg)	Lift Capacity lb (kg)	Lift Capacity lb (kg)	Lift Capacity lb (kg)
+16 ft (4.87 m)	—	—	—	—	2,115 (959)	2,298 (1 043)
+14 ft (4.27 m)	3,039 (1 378)	3,285 (1 490)	2,837 (1 287)	3,083 (1 398)	2,395 (1 086)	2,603 (1 181)
+12 ft (3.66 m)	3,413 (1 548)	3,691 (1 674)	3,201 (1 452)	3,479 (1 578)	2,536 (1 151)	2,757 (1 250)
+10 ft (3.05 m)	3,499 (1 587)	3,784 (1 716)	3,281 (1 488)	3,566 (1 618)	2,593 (1 176)	2,818 (1 278)
+8 ft (2.44 m)	3,485 (1 581)	3,768 (1 709)	3,263 (1 480)	3,546 (1 608)	2,564 (1 163)	2,786 (1 264)
+6 ft (1.83 m)	3,438 (1 559)	3,717 (1 686)	3,213 (1 457)	3,492 (1 584)	2,549 (1 156)	2,770 (1 257)
+4 ft (1.22 m)	3,374 (1 530)	3,648 (1 655)	3,146 (1 427)	3,420 (1 551)	2,521 (1 144)	2,741 (1 243)
+2 ft (0.61 m)	3,307 (1 500)	3,575 (1 622)	3,077 (1 396)	3,345 (1 517)	2,489 (1 129)	2,706 (1 227)
Ground Level	3,251 (1 475)	3,513 (1 594)	3,018 (1 369)	3,280 (1 488)	2,489 (1 129)	2,706 (1 227)
-2 ft (0.61 m)	3,201 (1 452)	3,459 (1 569)	2,965 (1 345)	3,223 (1 462)	2,466 (1 118)	2,680 (1 215)
-4 ft (1.22 m)	3,175 (1 440)	3,430 (1 556)	2,935 (1 331)	3,190 (1 447)	2,446 (1 109)	2,659 (1 206)
-6 ft (1.83 m)	3,182 (1 443)	3,437 (1 559)	2,938 (1 333)	3,193 (1 448)	2,443 (1 108)	2,656 (1 205)
-8 ft (2.44 m)	3,258 (1 478)	3,520 (1 597)	3,007 (1 364)	3,269 (1 483)	2,465 (1 118)	2,679 (1 215)
-10 ft (3.05 m)	3,441 (1 561)	3,717 (1 686)	3,175 (1 440)	3,451 (1 565)	2,530 (1 148)	2,750 (1 248)
-12 ft (3.66 m)	—	—	—	—	2,707 (1 228)	2,943 (1 335)
-14 ft (4.27 m)	—	—	—	—	3,239 (1 469)	3,521 (1 597)
Dipper Lift						
+14 ft (4.27 m)	—	—	—	—	4,281 (1 942)	4,281 (1 942)
+12 ft (3.66 m)	5,822 (2 641)	5,822 (2 641)	5,618 (2 548)	5,618 (2 548)	4,046 (1 835)	4,046 (1 835)
+10 ft (3.05 m)	5,600 (2 540)	5,600 (2 540)	5,399 (2 449)	5,399 (2 449)	3,984 (1 807)	3,984 (1 807)
+8 ft (2.44 m)	5,562 (2 523)	5,562 (2 523)	5,360 (2 431)	5,360 (2 431)	3,913 (1 775)	3,913 (1 775)
+6 ft (1.83 m)	6,236 (2 829)	6,236 (2 829)	6,030 (2 735)	6,030 (2 735)	4,166 (1 889)	4,166 (1 889)
+4 ft (1.22 m)	7,424 (3 368)	7,424 (3 368)	7,203 (3 267)	7,203 (3 267)	4,102 (1 861)	4,102 (1 861)
+2 ft (0.61 m)	—	—	—	—	4,850 (2 200)	4,850 (2 200)

NOTE: Boom and Dipper Lift Capacities are rated per SAE J31 and are 87% of the maximum hydraulic lift force available with the specified options.

	Standard Backhoe	Extendahoe®	
		Retracted	Extended
Digging depth:			
Maximum	14 ft 6 in (4.41 m)	14 ft 6 in (4.41 m)	17 ft 11 in (5.47 m)
Maximum with hi-capacity bucket	15 ft 0 in (4.51 m)	15 ft 0 in (4.51 m)	18 ft 6 in (5.63 m)
2 ft (610 mm) flat bottom	14 ft 4 in (4.37 m)	14 ft 4 in (4.37 m)	17 ft 10 in (5.43 m)
8 ft (2.44 m) flat bottom	13 ft 4 in (4.06 m)	13 ft 4 in (4.06 m)	17 ft 1 in (5.19 m)
Overall reach from:			
Rear axle centerline	21 ft 10 in (6.66 m)	21 ft 10 in (6.66 m)	25 ft 3 in (7.69 m)
Swing pivot	18 ft 2 in (5.55 m)	18 ft 2 in (5.55 m)	21 ft 7 in (6.58 m)
Loading height	12 ft 1 in (3.67 m)	12 ft 1 in (3.67 m)	14 ft 5 in (4.38 m)
Loading reach	4 ft 7 in (1.41 m)	4 ft 7 in (1.41 m)	7 ft 3 in (2.20 m)
Swing arc	180°	180°	180°
Bucket rotation:			
Straight links	175.6°	175.6°	175.6°
Mechanical coupler	198.0°	198.0°	198.0°
Hydraulic coupler – Extendahoe® dipper	194.8°	194.8°	194.8°
Hydraulic coupler – standard dipper	198.0°	198.0°	198.0°
Stabilizer spread – operating:			
Flip pad	9 ft 3 in (2.82 m)	9 ft 3 in (2.82 m)	9 ft 3 in (2.82 m)
Cast pad	9 ft 7 in (2.93 m)	9 ft 7 in (2.93 m)	9 ft 7 in (2.93 m)
Digging force:			
Bucket cylinder – SAE rated 3,460 psi	13,975 lb (61 363 N)	13,975 lb (61 363 N)	13,975 lb (61 363 N)
Bucket cylinder – Power Lift	14,452 lb (64 240 N)	14,452 lb (64 240 N)	14,452 lb (64 240 N)
Dipper cylinder – SAE rated 3,460 psi	8,657 lb (38 508 N)	8,657 lb (38 508 N)	6,305 lb (28 045 N)
Dipper cylinder – Power Lift	9,070 lb (40 345 N)	9,070 lb (40 345 N)	6,606 lb (29 382.7 N)
Leveling angle:			
Flip pad	11.8°	11.8°	11.8°
Cast pad	12.8°	12.8°	12.8°

NOTE: Lift capacities apply straight to the rear of prime mover. 4WD with 19.5 L x 24.0 tires equipped with 24 in (610 mm) heavy-duty bucket and Case coupler except as noted.

See page 1

FPT F5BFL413B diesel
Selective Catalytic Reduction – SCR
Full flow engine oil filter
Aspirated air cleaner – replaceable dual element dry type with radial seal
Fuel filter with water trap
Radiator with de-aeration bottle
Antifreeze to -34° F (-37° C)
Electronic throttles – foot and rotary hand
Self-adjusting belt
High Pressure Common Rail computer controlled injection with diagnostic features
Engine ECO Mode – Detent on backhoe hand throttle, push button switch on dash
Auto Engine Idle
Auto Engine Shutdown
Auto Protection Shutdown
Electronic Fuel Priming
Cold Weather Starting Aid:
Dual 12 volt batteries, glow plugs, engine block heater and heated CCV hose

Power Shuttle 4F-4R synchromesh transmission
Front axle:
2WD front axle with 11.0 L x 16.0 tires
4WD mechanically driven front axle with 12.0 L x 16.5 tires and drive shaft guard
Rear axle:
2/4WD heavy-duty outboard planetary drive, with 19.5 L x 24.0 tires
Torque converter – 11.8 in (300 mm)
On-the-go electric 4WD control
Electric F/R shuttle control
Electric differential lock control, push-button
Park brake, spring-applied, hydraulic release – SAHR
Drive shaft guard – 4WD models

Ground level remote hydraulic test ports
Pump:
41 gpm @ 3,000 psi
(156.2 L/min @ 207 bar)
Heavy-duty hydraulic oil cooler
7-micron, spin on oil filter

Bucket position indicator; Lifting lugs and tie downs on standard bucket; Single lever control with self-leveling and return-to-dig; Hand operated clutch disconnects on loader and shift levers, single lever 4-function loader control: lift, dump, clutch cut-out, differential lock

Over center design, Fabricated "S" boom; Pro Control System; Dipperstick integrated serrated gripper teeth; Case mechanical coupler
Cleated dirt stabilizer pads

Forward tilt engine hood
Replaceable, molded front bumpers
Front/Rear tie downs
Reflective logos
Signal Lights – cab and canopy:
2 rear tail/stop
2 front flashers/turn
2 rear flashers/turn
Working/Driving Lights – cab and canopy:
Adjustable halogen work lights – 55 W:
4 front
2 side – one left, one right
4 rear
Master disconnect switch and remote jump-start terminals
Hydrostatic steering
Backup alarm
Vertical spin-on engine oil, fuel and hydraulic filters
Locking DEF/Fuel covers
Tool box – bolt-on, step-mounted

CASE SiteWatch™ Telematics – includes hardware and a 5-yr Advanced data subscription

1-Year/Unlimited-Hour Full-Coverage Base Limited Warranty
2-Year/2,000-Hour Extended Engine Warranty

Speed selectable Auto Ride Control – 4WD models

Comfort Steering with two speed steering pump and 3rd/4th gear cutout

ROPS/FOPS certified protective cab available in LH Door or 2 door with heat, A/C, defroster, door activated dome light, 4 front, 4 rear and 2 adjustable side lights, floor mat, tinted glass, bluetooth radio, front and rear wiper and fender extensions

Deluxe Cab package included on 2-door cabs includes: deluxe interior, viscous fan, pull-down sun visor and 72 dba sound level

Premium multi-color, hand stitched cloth, heated air suspension seat – not for use with ROPS Canopy option

Severe Cold Weather Starting Aid: Synthetic transmission, hydraulic and engine oil – order with cold weather starting aid

PowerDrive H-Type transmission, 4F-4R, hydraulic clutch shifting, kick down, transmission disconnect and FNR switch in loader control lever, includes auto shift mode and direct drive

4WD heavy-duty mechanically driven front axle with 12.5/80 x 18.0 tires

Auxiliary hydraulics for loader-mounted equipment with thumb-operated proportional control

Hydraulic front quick coupler

Tool portfolio of additional attachments

Buckets – see page 2

1-way Auxiliary backhoe hydraulics for hammers, plate compactors or similar 1-way flow attachments

1-way/2-way Auxiliary backhoe hydraulics for hammers, plate compactors or similar 1-way flow attachments or switch to 2-way flow for thumbs, augers or similar 2-way flow attachments

Extendahoe®

Power Lift

Power Boost

Bolt-on hardened gripper teeth

Two-lever control – backhoe or Extendahoe®

Pilot operated control system:
- Fingertip proportional Electro-Hydraulic stabilizer controls
- Thumb-operated proportional Electro-Hydraulic Extendahoe® control
- Thumb-operated horn button
- Thumb-operated auxiliary hydraulic control
- Infinitely adjustable towers
- In-cab switchable "excavator to backhoe" control pattern change

Flip over stabilizer pads

Hydraulic bucket quick coupler

Universal coupler – CAT/Deere compatible

Buckets – see page 2

Hydraulic thumb – Includes: 2 replaceable, high strength, bolt on tines with two positions for Universal or Hi-Cap buckets – meshes with Bucket teeth on 18 in & 24 in Buckets

Front tires:
- 11.0 L x 16.0 or 12.0 L x 16.5
- 12.5/80 x 18.0 10-ply includes heavy duty front axle

Rear tires:
- 500/70 R24 Michelin or 19.5 L x 24.0

Special paint

LED Working/Driving Light Package:
- 4 front
- 4 rear
- 2 side

Front Fenders

Special Feature Request

© 2023 CNH Industrial America LLC. All rights reserved. CASE IH is a trademark registered in the United States and many other countries, owned by or licensed to CNH Industrial N.V. its subsidiaries or affiliates. CNH Industrial Capital is a trademark in the United States and many other countries, owned by or licensed to CNH Industrial N.V. its subsidiaries or affiliates. Printed in U.S.A. Contains 10% post-consumer liner.

IMPORTANT: CASE Construction Equipment Inc. reserves the right to change these specifications without notice and without incurring any obligation relating to such change. Availability of some models and equipment built vary according to the country in which the equipment is used. The illustrations and text may include optional equipment and accessories and may not include all standard equipment. Your CASE dealer/distributor will be able to give you details of the products and their specifications available in your area.

Biodiesel Ready: CASE Construction Equipment is biodiesel-friendly. NOTE: All engines meet current EPA emissions regulations. All specifications are stated in accordance with SAE Standards or Recommended Practices, where applicable.

SAFETY™ NEVER HURTS: Always read the Operator's Manual before operating any equipment. Inspect equipment before using it, and be sure it is operating properly. Follow the product safety signs and use any safety features provided.

Form No. CCE202306580SN
Replaces Form No. CCE202012580SN